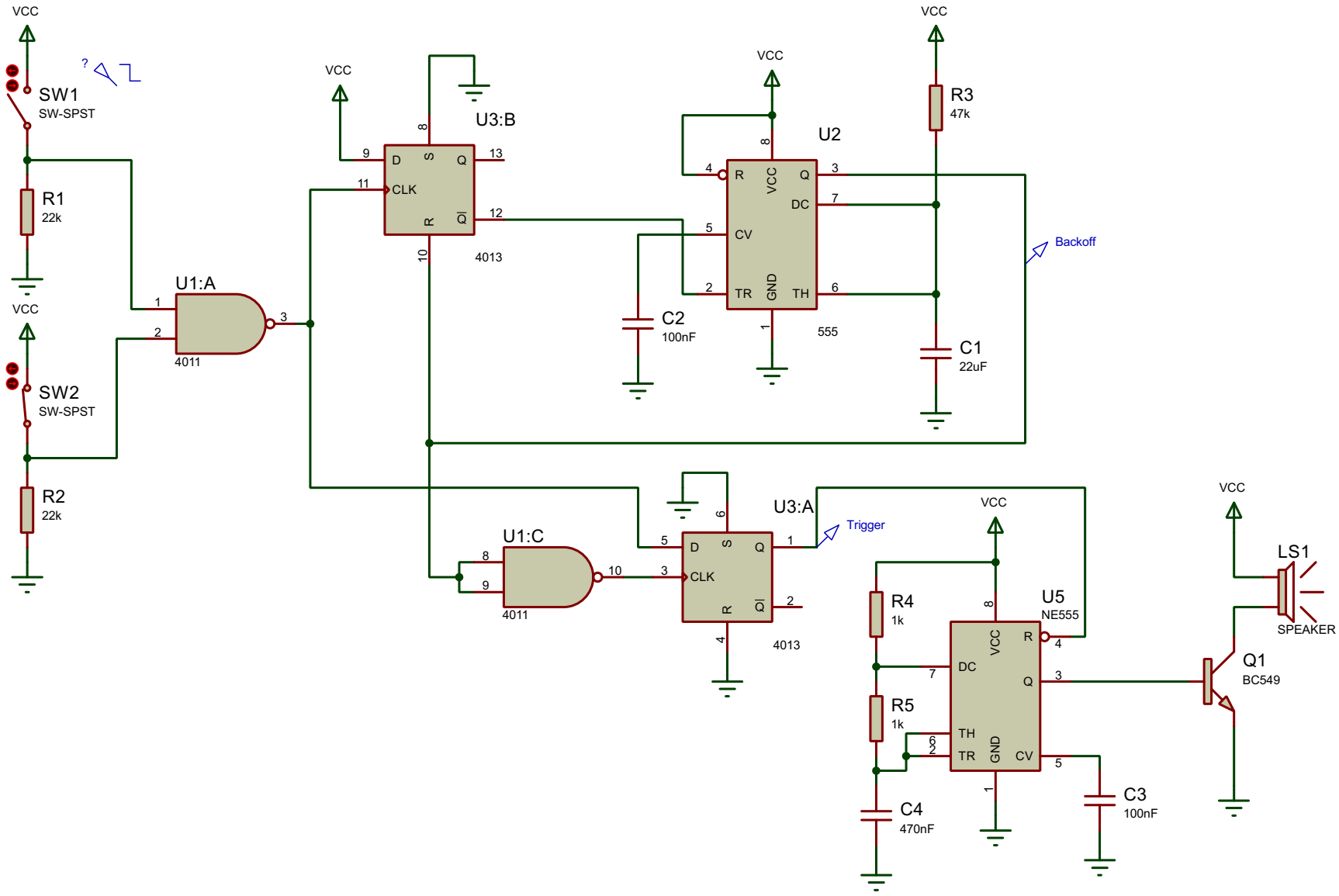
VCC
SW1
SW-SPST
R1
22k
VCC
SW2
SW-SPST
R2
22k
U1:A
4011
VCC
U3:B
4013
D
S
Q
CLK
R
Q̄
VCC
U2
555
R
VCC
Q
DC
CV
TR
GND
TH
C2
100nF
VCC
R3
47k
C1
22uF
Backoff
U1:C
4011
U3:A
4013
Trigger
VCC
R4
1k
R5
1k
C4
470nF
U5
NE555
DC
VCC
R
Q
TH
TR
GND
CV
C3
100nF
VCC
LS1
SPEAKER
Q1
BC549