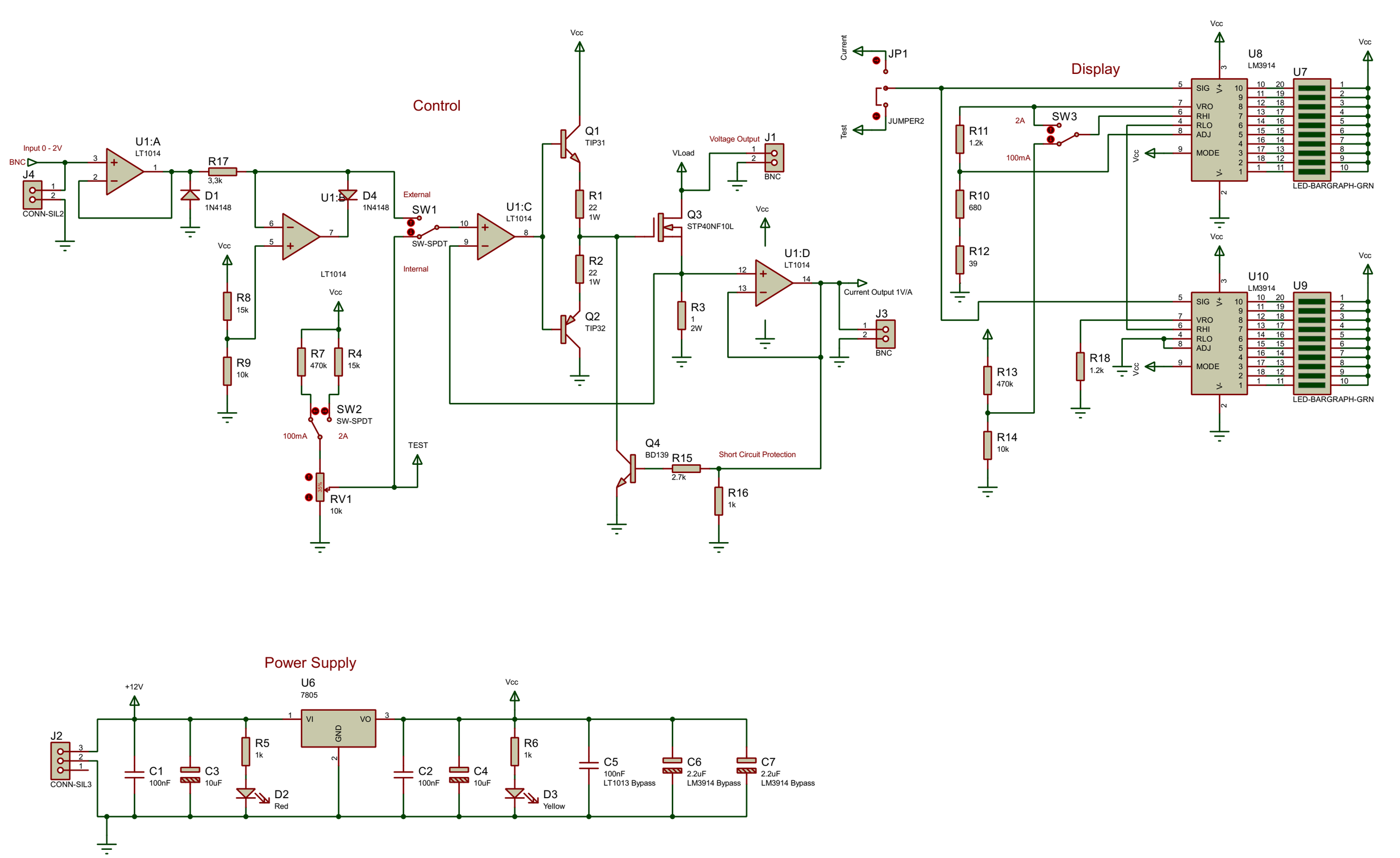
Control
Display
Power Supply
Input 0 - 2V
BNC
J4
CONN-SIL2
U1:A
LT1014
R17
3,3k
D1
1N4148
U1:B
D4
1N4148
External
SW1
SW-SPDT
Internal
U1:C
LT1014
Vcc
R8
15k
R9
10k
R7
470k
R4
15k
SW2
SW-SPDT
100mA
2A
RV1
10k
TEST
Q1
TIP31
R1
22
1W
R2
22
1W
Q2
TIP32
VLoad
Q3
STP40NF10L
R3
1
2W
Voltage Output
J1
BNC
U1:D
LT1014
Current Output 1V/A
J3
BNC
Q4
BD139
R15
2.7k
Short Circuit Protection
R16
1k
Current
JP1
Test
JUMPER2
R11
1.2k
R10
680
R12
39
SW3
2A
100mA
R13
470k
R14
10k
U8
LM3914
U7
LED-BARGRAPH-GRN
U10
LM3914
U9
LED-BARGRAPH-GRN
R18
1.2k
SIG
VRO
RHI
RLO
ADJ
MODE
V+
V-
+12V
J2
CONN-SIL3
C1
100nF
C3
10uF
R5
1k
D2
Red
U6
7805
VI
VO
GND
C2
100nF
C4
10uF
R6
1k
D3
Yellow
C5
100nF
LT1013 Bypass
C6
2.2uF
LM3914 Bypass
C7
2.2uF
LM3914 Bypass